Quick Start Guide

EVO Lite series

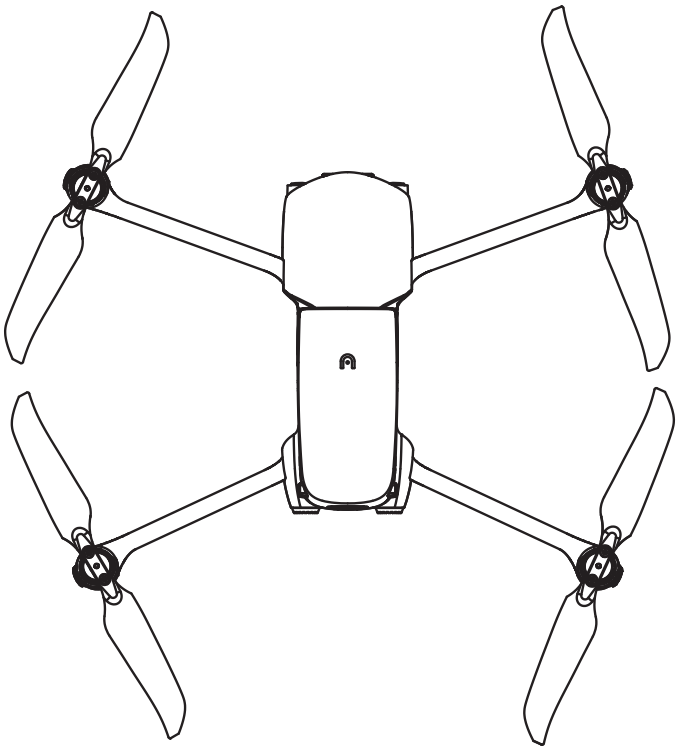

AUTEL ROBOTICS

Contents

1. Reading notes 1
2. Aircraft 1
3. Flight LED indicator 2
4. Remote control 4
5. Charge the aircraft battery & remote control 5
6. Install the Autel Sky™ app 5
7. Prepare the aircraft battery 6
8. Install the propellers 7
9. Prepare the remote control 8
10. Power up 9
11. Take off 9
12. Joystick controls (Mode 2) 11

1. Reading notes

- Please read all documentation before your first flight.
- Failure to operate the aircraft responsibly could lead to injury or damages, and may void any applicable warranty coverage.

2. Aircraft

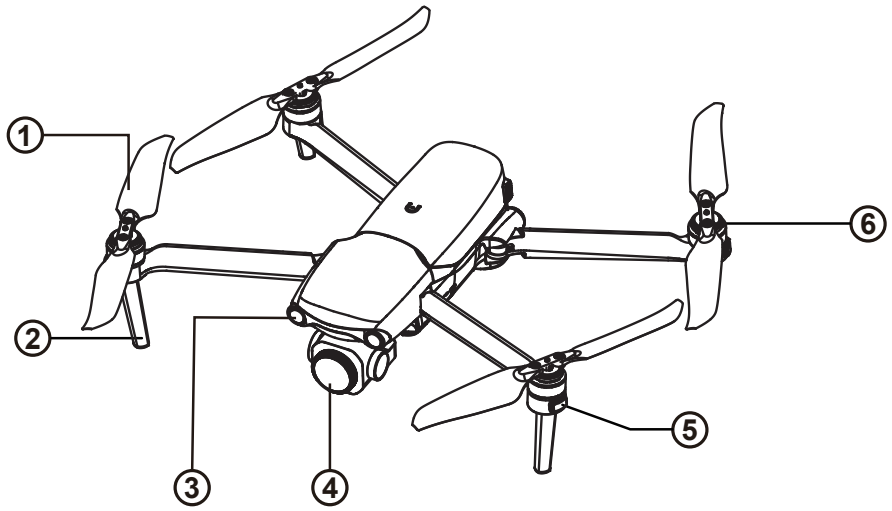

① Propeller
② Landing gear
③ Forward vision system
④ Gimbal camera
⑤ Front LED indicator
⑥ Motor

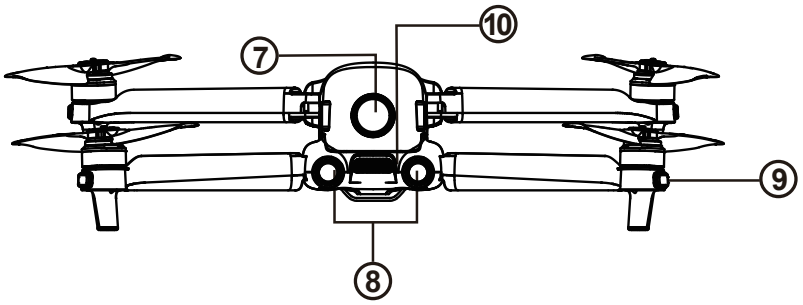

⑦ Power button
⑧ Rear vision system
⑨ Rear LED indicator
⑩ Exhaust port

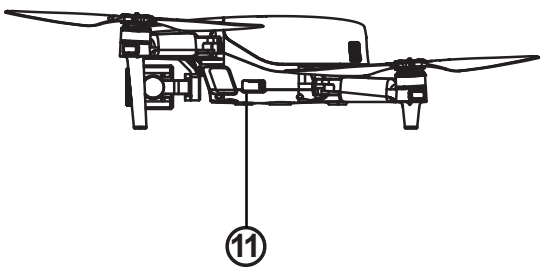

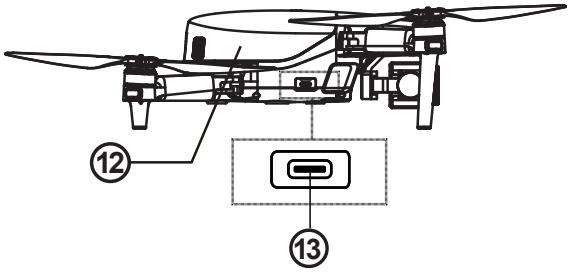

⑪ SD card slot

⑫ Aircraft battery

⑬ USB-C port

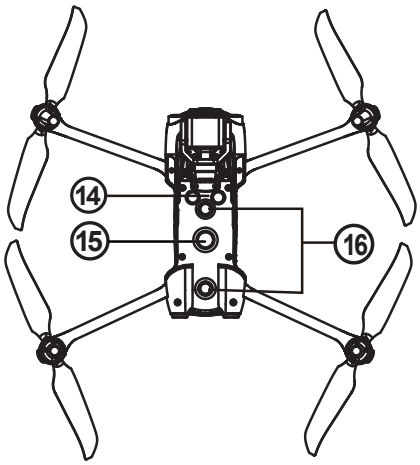

⑭ Ultrasonic sensor

⑮ Downward vision lighting LED

⑯ Downward vision system

3.Flight LED indicator

A LED indicator is located on the end of each aircraft arm. The front LEDs will light up solid red to help you identify the direction of the aircraft's nose. The rear LEDs will display the current flight status of the aircraft. The chart below shows the meaning of each status indicator. The chart below shows the meaning of each status indicator.

Light indicator:

Slow flashing:flashes once every 2 seconds

Fast flashing:flashes twice per second

Alternate flashing:flashes alternately in different colors

Color indicator:

R Red

G Green

Y Yellow

Definitions of Flight LED Indicator Status	
Normal status	
RGY - Alternate Flashing	System self-test is activated
G - Slow Flashing	The aircraft is in GPS mode
Warning	
Y - Flashing slowly	The aircraft is in ATTI mode
Y - Fast flashing	No connection between the aircraft and the remote control
R - Slow Flashing	Low battery warning
R - Fast flashing	Critical low battery warning
R - Solid Light	Critical problems, IMU error
Compass calibration	
Y - Fast flashing	Ready to calibrate the compass/aircraft is calibrating
G -Solid Light	Calibration is successful
R - Solid Light	Calibration is failed
Pairing	
Y - Fast flashing	The aircraft and the remote control are being paired

4. Remote control

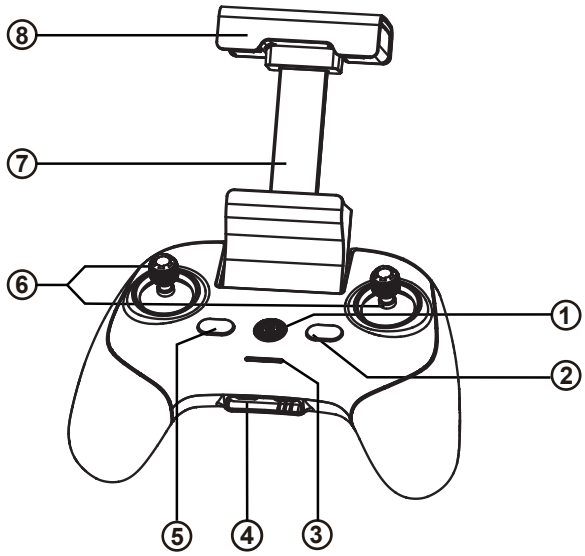

① Power button

② Pause button

③ Battery indicator

④ Charging interface

⑤ Home button

⑥ Joystick

⑦ Mobile device stand

⑧ Antenna

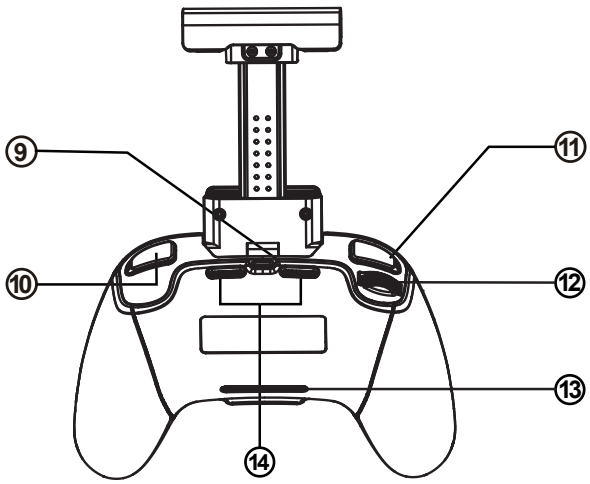

⑨ Remote control adapter

⑩ Camera/Video button

⑪ Custom button

⑫ Gimbal pitch control dial

⑬ Air inlet

⑭ Air outlet

5. Charge the aircraft battery & remote control

(1) Aircraft battery: Press and hold the release button on both sides of battery and plug the charging cable into the charging slot of battery.

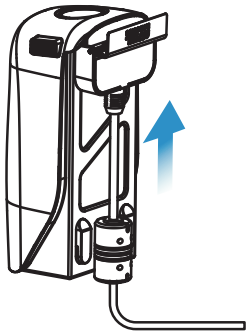

(2) Charging the remote control: Insert the Type-C charging cable into the Type-C port of the remote control.

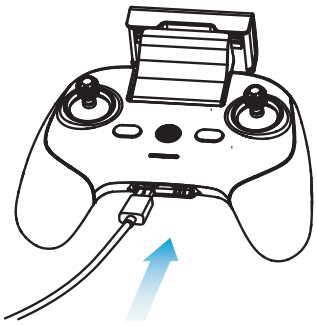

Note

•Always fully charge the aircraft and remote control batteries before flying. Please use a dedicated charger to charge the device.
•It takes about 90 minutes to fully charge the aircraft battery and 120 minutes to fully charge the remote control.
•The aircraft battery indicator will flash cyclically when it is charging, and it will be off when the battery is full.

---

6. Install the Autel Sky™ app

Refer to the following steps to connect to the application.

1. Enter the keyword "Autel Sky" in the App Store or Google Play, then search for and download the Autel Sky™ application.
2. Launch the application on your mobile device.
3. Follow the on-screen instructions to connect the mobile device and the remote control.

7. Prepare the aircraft

(1) Please always remove the gimbal protective cover before turning on the power switch of the aircraft.

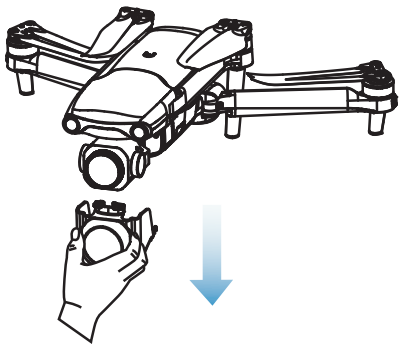

(2) Unfold the arms and propellers.

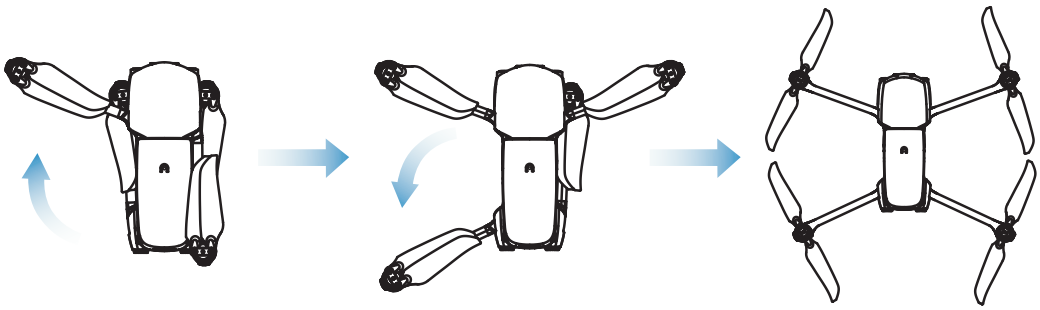

⚠ Important

Before folding the arms, turn off the power switch of the aircraft. Fold the rear arm and propeller first, then fold the front arm.

---

8. Install the propellers

The propeller is installed by default on the aircraft. If you need to re-install it, please refer to the following instructions. Note that the propeller must be intact and firmly installed on the aircraft, and the propeller with the white circle mark must be paired with the motor.

- Install the propeller
  (1) Confirm that the aircraft is turned off.
  (2) Choose the propeller that matches each motor.
  (3) Press down the propeller firmly, and then turn it in the locked direction to securely install the propeller.

- Disassemble the propeller
  (1) Turn off the aircraft.
  (2) Press down the propeller firmly, and then turn it in the unlocking direction to remove the propeller.

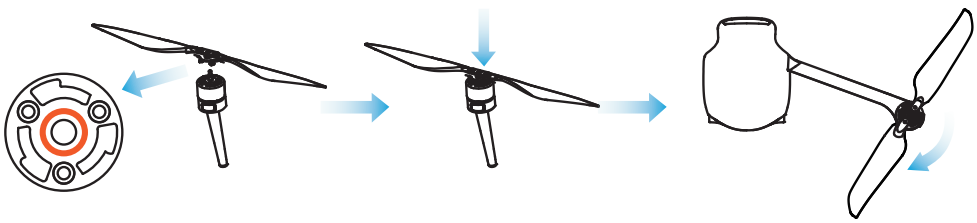

Introduction

Lock direction: Rotate in the indicated direction to fix the propeller.

Unlocking direction: Rotate the propeller as instructed to loosen it.

Black coded propeller>Pairing>Black coded motor

White coded propeller>Pairing>White coded motor

⚠ **Warning**

Before installing or removing the propeller, turn off the power switch of the aircraft.

⚠ **Important**

While installing or removing the propeller, it is recommended to wear protective gloves.

9. Prepare the remote control

(1) Slowly pull out the mobile device holder.

(2) When the antenna plane is facing the aircraft, the signal quality of the remote control and the aircraft can reach the best condition.

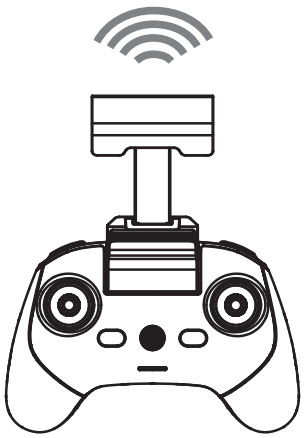

10. Power on

（1）Hold the power button for 2 seconds to turn on the remote control.

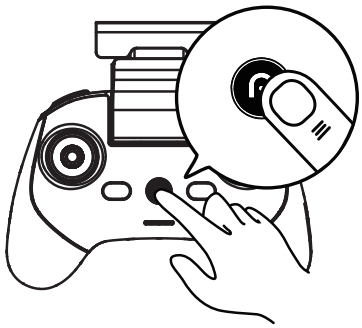

（2）Press and hold the power button for 3 seconds to turn on the aircraft. The battery indicator will then light up to show the current battery level of the aircraft.

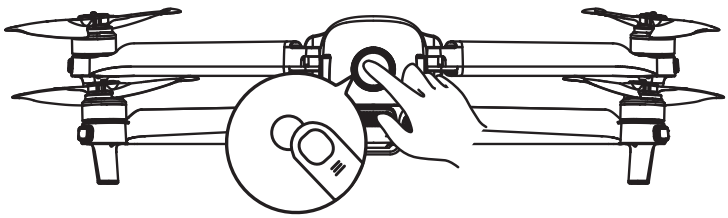

11. Take off

（1） Before taking off, please place the aircraft on a flat surface with the tail of the aircraft facing you.

（2） Tilt the joystick inwardly or outwardly and hold for 1 second, as shown in the figure below.

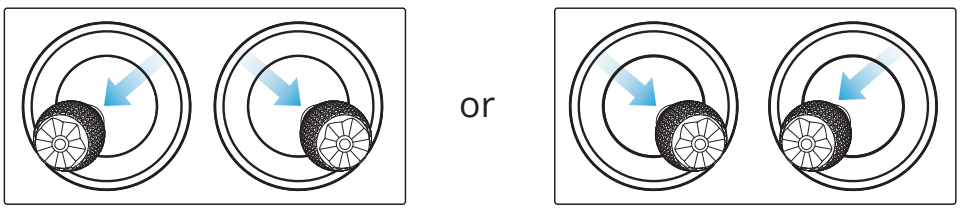

（3） After the motor starts, slowly push the left joystick upward (mode 2).

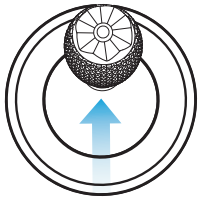

Note: Before taking off, place the aircraft on a level surface with the back side of the aircraft facing you.

12. Joystick controls (Mode 2)

Left stick

Left view

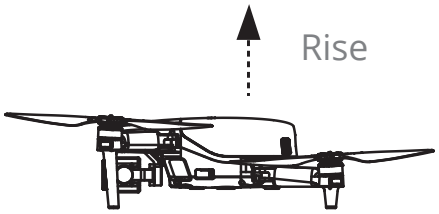

Push up

Left view

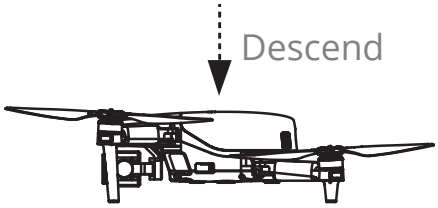

Push down

Top view

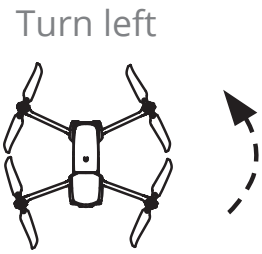

Push left

Top view

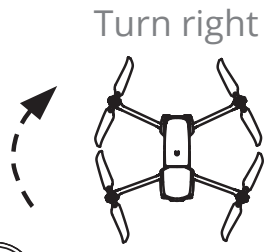

Push right

Right stick

Top view

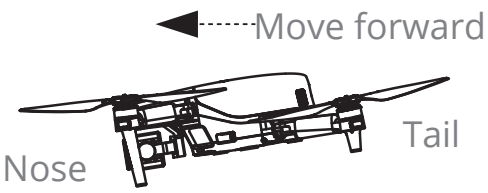

Push up

Top view

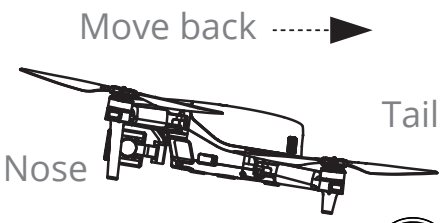

Push down

Rear view

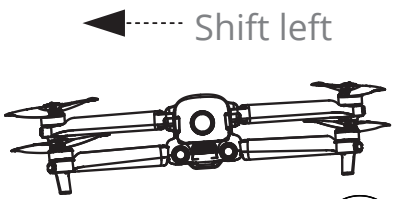

Push left

Rear view

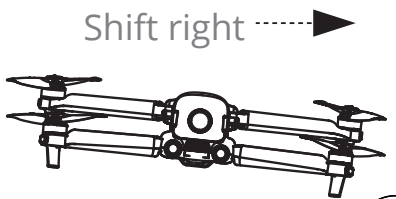

Push right

AUTEL
ROBOTICS

WWW.AUTELROBOTICS.COM

©2021-2022 AUTEL ROBOTICS CO., LTD.
ALL RIGHTS RESERVED