How to safely pack and ship batteries

Effective date: January 2019

How to safely pack and ship batteries

Although they are very common today in portable electronics, tools and other applications, batteries can be a source of dangerous heat, sparks or fire if they are improperly packaged for shipping. For this reason, UPS® customers must follow applicable safety regulations and appropriate precautions when preparing batteries for transportation. Battery shipments may be subject to both U.S. and international safety regulations, and because of the potential dangers associated with violations of those regulations, people who do not follow the regulations when packing their shipments could be subject to fines or other penalties.

UPS has assembled this illustrative guide to help you safely pack and ship many kinds of batteries. In some cases, such as with alkaline or certain nonspillable lead-acid batteries, your responsibilities may be limited to simple steps such as: selecting strong outer packaging; carefully protecting battery terminals to prevent sparking or short circuit; and carefully preparing the interior package components to keep tools or other metal objects away from batteries.

Other types of batteries, including lithium ion and lithium metal types, may be fully regulated as hazardous materials (also known as dangerous goods) for transportation, so that in addition to those basic safety precautions they require use of specialized packaging, specific hazard labeling, and specific documents certifying compliance with the applicable regulations.

All shippers are required to understand and comply with the applicable regulations and UPS tariffs. This guide provides general information about shipments governed by regulations published by the International Air Transport Association (IATA), http://www.iata.org and the U.S. Department of Transportation's Pipeline and Hazardous Materials Safety Administration (PHMSA), http://phmsa.dot.gov/hazmat. Additionally, other international regulatory requirements apply, such as the *International Maritime Dangerous Goods (IMDG) Code*, *ADR Dangerous Goods Regulations for European Road Transport, or Transport Canada Dangerous Goods Regulations (TDGR).*

Protect batteries and terminals

When shipping almost any battery, you must protect all terminals against short circuits that can result in fires. Protect terminals by completely covering them with an insulating, non-conductive material (e.g., using electrical tape or enclosing each battery separately in a plastic bag), or packing each battery in fully enclosed inner packaging to ensure exposed terminals are protected.

- Package the batteries to keep them from being crushed or damaged, and to keep them from shifting during handling.
- Always keep metal objects or other materials that can short circuit battery terminals away from the batteries (e.g., using a separate inner box for the batteries).

Note: *To prevent fire, any device with installed batteries must not turn on while in transport. Protect switches that can be accidentally activated. Even very simple devices like flashlights or rechargeable drills can generate a dangerous amount of heat if accidentally activated.*

Recalled or recycled batteries

Never use Air services to ship batteries recalled by the manufacturer for safety reasons, as such shipments are prohibited by regulation (i.e., *IATA Dangerous Goods Regulations, Special Provision A154*). Also, batteries accumulated for recycling may not be sent via Air services: https://www.ups.com/content/us/en/shipping/time/service/index.html. UPS® Ground service between Alaska, Hawaii or Puerto Rico and the continental U.S. is unavailable for either recalled or recycled batteries, as shipments to or from these points must travel by aircraft for at least one flight segment.

Customers wishing to transport damaged, defective or recalled (DDR) batteries must be pre-approved by UPS. UPS only accepts DDR shipments via Ground Continental U.S. Service in special permit packaging designed to contain a thermal event. Contact your Sales Team for more information.

© 2012-2018 United Parcel Service of America, Inc. UPS, the UPS brandmark and the color brown are trademarks of United Parcel Service of America, Inc. All rights reserved. 11/18

Electronic items for repair

When sending equipment for repairs, such as computers and cell phones or other battery operated devices, if there is any risk that the device could overheat, it should be sent ***without batteries***.

Regulatory agencies

What do the abbreviations "IATA" and "PHMSA" mean?

IATA is the International Air Transport Association. It is a global trade organization that develops commercial standards and publishes the *Dangerous Goods Regulations*, containing standards for the transport of dangerous goods by air. IATA's *Dangerous Goods Regulations* are based on the International Civil Aviation Organization (ICAO) *Technical Instructions for the Safe Transport of Dangerous Goods by Air*. ICAO is the United Nations body with jurisdiction over international aviation issues.

PHMSA is the Pipeline and Hazardous Materials Safety Administration of the U.S. Department of Transportation, which develops regulations for transport of dangerous goods by all modes within the U.S.

Types of batteries

There are a variety of batteries available today and, while in transport, many are regulated as hazardous materials (also known as dangerous goods) that may only be shipped with UPS by shippers with contracts for hazardous materials/dangerous goods service.

ID Number	Proper Shipping Name and Description	Hazard Class
UN2794	Batteries, Wet, Filled with Acid	8
UN2795	Batteries, Wet, Filled with Alkali	8
UN2800	Batteries, Wet, Nonspillable	8
UN3028	Batteries, Dry, Containing Potassium Hydroxide Solid	8
UN3090	Lithium Metal Batteries	9
UN3091	Lithium Metal Batteries Contained in Equipment or Lithium Metal Batteries Packed with Equipment	9
UN3292	Batteries, Containing Sodium	4.3
UN3480	Lithium Ion Batteries	9
UN3481	Lithium Ion Batteries Contained in Equipment or Lithium Ion Batteries Packed with Equipment	9

Some of the battery types shown above may be shipped under regulatory exceptions that provide relief from the full requirements of the hazardous materials/dangerous goods regulations. In addition, there are some battery types (e.g., conventional dry cell or alkaline batteries in consumer sizes) that are not regulated at all, provided they are adequately protected against short circuit.

While this document is designed to highlight safety practices for UPS customers who pack and ship batteries, it does not replace the applicable regulations. For more information, consult the U.S. DOT's Hazardous Materials Regulations (49 CFR). You may also consult U.S. DOT's online information at http://phmsa.dot.gov/hazmat, or call the U.S. DOT's Hazardous Materials Information Center at 1-800-467-4922.
International air shipments may additionally be subject to the Dangerous Goods Regulations of the International Air Transport Association (IATA). For more information, see http://www.iata.org or check local regulations.

© 2012-2018 United Parcel Service of America, Inc. UPS, the UPS brandmark and the color brown are trademarks of United Parcel Service of America, Inc. All rights reserved. 11/18

Types of batteries (cont.)

Wet Batteries (UN2794 and UN2795)

These batteries are commonly used in cars, electric wheelchairs, forklifts, some continuous computer power sources and other applications. They contain highly corrosive acid or alkali and can cause fires from short circuit. All terminals must be protected against short circuit, and the batteries packaged and tested according to *49 CFR 173.159* for U.S. shipments, or *IATA Section 5, Packing Instruction 870*. Note that regardless of service level, small package shipments must use packaging prescribed for air shipment — e.g., the air shipments must include an acid- or alkali-proof liner, or include supplementary packaging with sufficient strength and adequate seals to prevent leakage of electrolyte fluid in the event of spillage (see Figs. 1 and 2). In regard to Figure 2, packages must be packed using a leak-proof liner. A rugged plastic bag resistant to the corrosive electrolyte is one way to create a leak-proof liner. Applicable shipping paper/Declarations for Dangerous Goods requirements must be met.

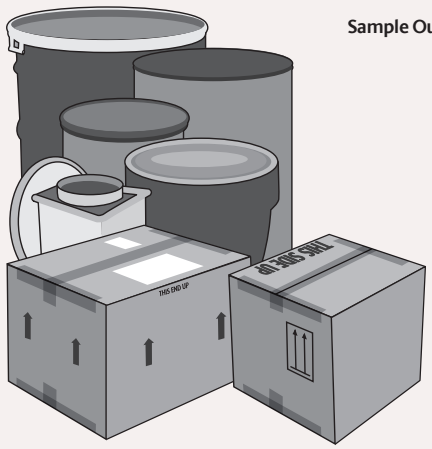

Figure 1
Sample Outer Packaging
Wet Batteries

Figure 2
Sample Packaging
Multiple Wet Batteries

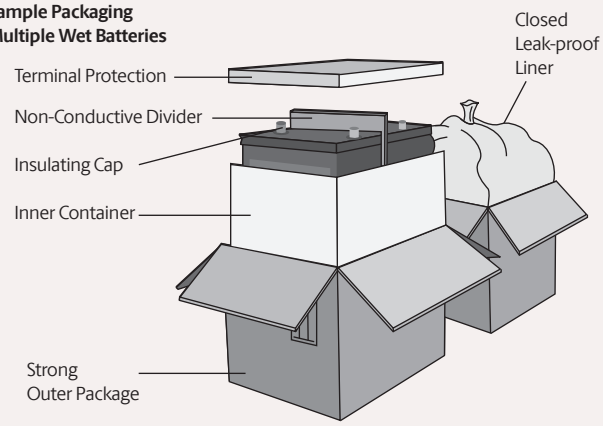

Nonspillable Batteries (UN2800)

These batteries may not be subject to the Hazardous Materials Regulations if they meet the pressure differential and vibration testing in *49 CFR 173.159*, as well as being plainly and durably marked either "NONSPILLABLE" or "NONSPILLABLE BATTERY" on the outer packaging (see Fig. 3). Conformance with *49 CFR 173.159a* is mandatory and the batteries must be prepared for transport so as to prevent short circuit and unintentional activation of any devices or equipment in the package.

Shipments of nonspillable acid or alkali batteries prepared under the IATA Dangerous Goods Regulations must be fully declared and conform to the requirements of *Packing Instruction 872*.

Nonspillable acid or alkali batteries that comply with certain additional testing are not subject to any regulations, provided the terminals are protected against short circuit. These additional requirements, which are stated in *49 CFR 173.159a(d)* and in *IATA Section 4.4, Special Provision A67*, require that the battery contain no free-flowing liquid, and the electrolyte must not flow from a cracked case at 55°C (131°F). The battery and package should be marked "NONSPILLABLE" or "NONSPILLABLE BATTERY."

Figure 3
Sample Packaging
Nonspillable
Batteries

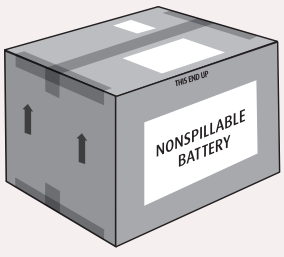

© 2012-2018 United Parcel Service of America, Inc. UPS, the UPS brandmark and the color brown are trademarks of United Parcel Service of America, Inc. All rights reserved. 11/18

Types of batteries (cont.)

Dry Batteries, Containing Potassium Hydroxide Solid (UN3028)

In the U.S., these batteries must be prepared according to *Special Provision 237 in 49 CFR 172.102*, which states that UN3028 materials "must be prepared and packaged in accordance with the requirements of *173.159(a) and (c)*. For transportation by aircraft, the provisions of *173.159(b)(2)* are applicable." International air shipments of these types of batteries must conform to *IATA Packing Instruction 871*.

Batteries, Containing Sodium (UN3292)

These batteries are not accepted in the UPS package environment.

Dry Batteries, Sealed, N.O.S. (Not Otherwise Specified)

These batteries are typically used for portable power applications, are hermetically sealed and generally use metals (other than lead) and/or carbon as electrodes. They must meet all the requirements set forth in *Special Provision 130 in 49 CFR 172.102*, which includes prevention of the dangerous evolution of heat from short circuit or damage. Under *IATA, Special Provision A123* must be followed, which includes short circuit protection of exposed terminals and protection against accidental activation of the battery.

Other batteries

Although common dry cells (e.g., AA, C, D batteries) may not be regulated as hazardous materials, all batteries can cause fires from short circuit if batteries and terminals are not protected. Each battery shipment must meet all the requirements set forth in *Special Provision 130 in 49 CFR 172.102*, which includes prevention of the dangerous evolution of heat from short circuit or damage. For air packages containing dry cell batteries with a voltage (electrical potential) that exceeds nine volts, the words "Not restricted" must be marked on the package to indicate compliance with the regulations. The equivalent requirement for IATA shipments is found in *Section 4.4 of the IATA Dangerous Goods Regulations, as Special Provision A123* (see Fig. 4).

Figure 4
Sample Packaging Dry Cell Batteries

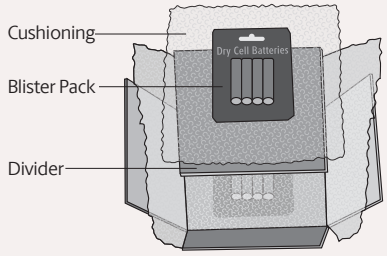

Lithium batteries

(UN3090, UN3091, UN3480, UN3481)

Regulatory changes related to lithium batteries are dynamic. While UPS works to keep abreast of these changes, note that regulations applicable to lithium batteries change often, both internationally and domestically in the United States.

About lithium batteries

Because lithium batteries are designed to provide high levels of power, the electrical energy in these batteries is significant, meaning that such batteries can sometimes generate a great amount of heat if short circuited. In addition, the chemical contents of these batteries may catch fire if damaged or if improperly designed or assembled. For these reasons, there are safety regulations controlling the shipment of these types of batteries. Shippers must conform to the applicable regulations published by PHMSA and/or IATA.

While all lithium batteries are classified as hazardous materials (also referred to as dangerous goods), there are exceptions for common small sizes of these batteries that simplify the rules for shipping these items by air. UPS accepts such common lithium batteries under those reduced regulations only when the batteries are packed with or contained in equipment (UN3091, UN3481).

For UPS, all air shipments of lithium ion or metal batteries shipped without equipment (UN3090, UN3480) must be fully regulated as dangerous goods, which requires a UPS Dangerous Goods contract.

This document describes the rules for shipping small lithium batteries packed with or contained in equipment for which UPS does not require a UPS Dangerous Goods contract.

© 2012-2018 United Parcel Service of America, Inc. UPS, the UPS brandmark and the color brown are trademarks of United Parcel Service of America, Inc. All rights reserved. 11/18

Shipping lithium batteries by air service
Regulations differ depending upon what type of lithium battery you are shipping (lithium ion or lithium metal) and whether you are shipping batteries packed with equipment or batteries contained in equipment.

Reminder: UPS does not accept Section II shipments of UN3090 or UN3480 in air services. These shipments must be fully regulated Dangerous Goods shipments, which require a UPS Dangerous Goods contract.

UPS has additional marking requirements for air shipments of UN3481 and UN3091 prepared and marked/labeled in accordance with Section II of the relevant Packing Instruction. Please see IATA Variation 5X-07. Note that this is optional for shipments with both origin and destination within the contiguous 48 U.S. states, excluding Alaska and Hawaii. http://www.iata.org/

UPS requires all lithium metal battery air shippers to be approved prior to shipping. This is in addition to a Dangerous Goods contract if required. Please review the requirements for lithium metal battery approval: https://www.ups.com/content/us/en/resources/ship/hazardous/responsible/lithium-battery-preapproval.html

Lithium battery types

There are two major kinds of lithium batteries, both of which contain very high levels of energy:

Lithium ion (Li-ion) batteries are rechargeable.

- *Sometimes called "secondary lithium batteries"*
- *Includes lithium polymer (Li-Po) batteries*
- *These batteries are often found in common electronic devices such as cell phones and laptops*

Lithium metal batteries are generally non-rechargeable.

- *Sometimes called "primary lithium batteries"*

Shipping lithium batteries by ground service
U.S. Only: Additional weight and labeling requirements apply to ground shipments of lithium batteries in the U.S. The requirements differ depending upon what type of lithium battery you are shipping (lithium ion or lithium metal) and whether you are shipping batteries packed without equipment, batteries packed with equipment, or batteries contained in equipment. (See pages 7, 9 and 11 for more guidance.)

Non-U.S: Most ground regulations such as ADR and TDGR have exceptions for shipping small lithium batteries. Check with local regulations to ensure compliance with any local or state variations.

UPS® Ground service to or from Alaska, Hawaii, Puerto Rico and many small islands also must travel by aircraft for at least one flight segment. Such services may not be used for lithium batteries.

What are some ways I can help prevent a short-circuit or activation of lithium batteries in my shipment while in transport?
A major risk of shipping lithium batteries is short-circuit of a battery or inadvertent activation while in transport. All batteries should be packed to eliminate the possibility of a short-circuit or activation (see Figure 5 for an example). Ensure no batteries can come in contact with other batteries, conductive surfaces or metal objects while in transport. Regulations require packing cells and batteries in fully enclosed inner packaging made of nonconductive material (e.g., plastic bags) and ensuring that exposed terminals or connectors are protected with non-conductive caps or tape or by other similar means. They also recommend securely cushioning batteries and packing them to prevent shifting during transport or loosening of terminal caps. Do not use envelopes or other soft-sided packs. Please see the IATA website for additional tips and guidance: http://www.iata.org/lithiumbatteries.

Figure 5
Sample Packaging
Lithium Batteries

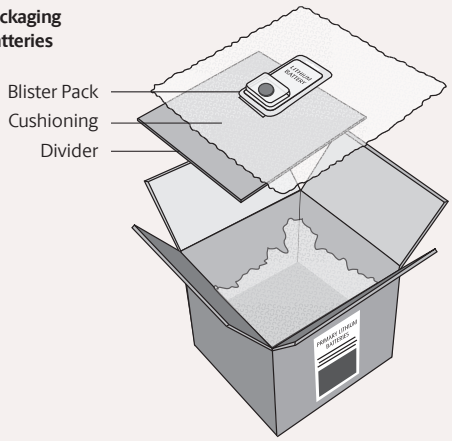

© 2012-2018 United Parcel Service of America, Inc. UPS, the UPS brandmark and the color brown are trademarks of United Parcel Service of America, Inc. All rights reserved. 11/18

General regulations and FAQs

Do quantity limits on cells and batteries apply to the overpacks? For the purposes of the regulation, what is considered the "package"?

An overpack may be used to consolidate several packages that have been properly prepared for shipment, but it is essential to understand that not all lithium battery shipments may be consolidated in an overpack. Lithium ion or metal batteries packed with or contained in equipment that are prepared under Section II of IATA Packing Instructions 966, 967, 969, or 970 in individual packages that are in compliance with the regulations may be consolidated within an overpack. However, it is required that the individual packages comply with the necessary requirements (such as limitations on the net battery weight or the ability to withstand a 1.2 meter drop test, as applicable). The overpack must be marked with the word "overpack" and marked with the appropriate lithium battery mark. See Figure 6 below.

Figure 6

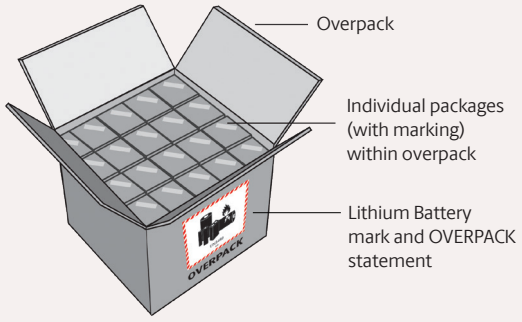

What does the abbreviation "Wh" mean?

"Wh" stands for "watt-hour." It is a measure used to indicate the energy capacity of a lithium ion cell or battery (amp hours x voltage = watt hours).

What is the "state of charge" or SoC?

This term refers to the percentage of the electrical stored capacity in a rechargeable cell or battery (e.g., lithium ion cells or batteries) that is available for use. A fully charged lithium ion battery has a 100% state of charge (SoC). Research has demonstrated that for lithium ion batteries, reduced SoC may provide an additional level of safety during transport and reduce the likelihood of a thermal event. In accordance with IATA, all lithium ion batteries (without equipment) shipped by air must not exceed 30% SoC.

What is a "button battery"?

A button battery is a small round battery where the height is less than the diameter[1] also commonly referred to as "coin batteries." Examples can be found in watches, calculators, electronic clocks, toys and other applications.

What is a "cell" versus a "battery" under this regulation?

- A *battery* is two or more cells electrically connected together by permanent means, including case, terminals and markings.

Note: *"Battery packs," "modules" or "battery assemblies" are treated as batteries under this regulation.*

- A *cell* is a single encased electrochemical unit. It has one positive and one negative electrode that exhibit a voltage differential across its two terminals.[1]

Note: *Many cells can be termed "battery" or "single-cell battery" in common conversation, but under this regulation a single cell must use the requirements related to "cells" only. Examples of a "cell" would be a CR123 primary lithium cell used for cameras and flashlights.*

Guidance on Shipping Lithium Battery Power Banks

The 2017 IATA Dangerous Goods Regulations and supplemental IATA Lithium Battery Guidance clarify that battery packs, modules or battery assemblies, often known as power banks or portable chargers, are regulated as lithium ion batteries (UN3480). Such shipments are subject to the UPS requirement that, when shipped by air, all lithium ion and metal batteries must be shipped as fully regulated dangerous goods, which requires a UPS Dangerous Goods contract.

Classification questions related to a specific product should be directed to the appropriate national authority in the country from or within which a shipper wishes to send lithium batteries.

Required labels and markings

Requirements for the use of the labels and markings described on the next page vary depending upon the type of battery being shipped (lithium ion or lithium metal) and whether the batteries are packed with equipment or contained in equipment.

See pages 8 and 10 for how and when these labels and markings must be used for air shipments of lithium batteries packed with or contained in equipment, as required by regulations. See pages 9 and 11 for labeling and marking requirements for ground shipments. Remember that air shipments of lithium ion (UN3480) and lithium metal (UN3090) batteries without equipment must be sent as fully regulated dangerous goods when shipped with UPS, which requires a UPS Dangerous Goods contract.

What does "equipment" mean when associated with lithium battery shipments?

Under the regulations, lithium ion or metal batteries may be classed as "packed with equipment" or "contained in equipment" when the batteries accompany or are installed in apparatus for which the lithium batteries will provide electrical power for operation.

What hazard labels are required?

For fully regulated shipments, the Class 9 Lithium Battery label is required. Note that the new label is mandatory from 01 January, 2019.

OLD

NEW

[1] Source: "IATA Lithium Battery Guidance Document: Transport of Lithium Metal and Lithium Ion Batteries." IATA. 2016. Web. http://www.iata.org/lithiumbatteries

© 2012-2018 United Parcel Service of America, Inc. UPS, the UPS brandmark and the color brown are trademarks of United Parcel Service of America, Inc. All rights reserved. 11/18

Required labels and markings (cont.)

Air Shipments

Lithium ion batteries packed with equipment:

Additional marking as follows:
*– Lithium ion batteries packed with equipment: "P.I. 966-II"**

Lithium Ion

May not be used after 31 December 2018

or

**Place for telephone number for additional information.

Lithium ion batteries contained in equipment:

For lithium ion batteries contained in equipment, the mark need not be used provided (a) the package contains no more than 4 cells or 2 batteries, and (b) the consignment contains no more than two packages of lithium ion batteries contained in equipment.

Additional marking as follows:
*– Lithium ion batteries contained in equipment: "P.I. 967-II"**

Lithium metal batteries packed with equipment:

Additional marking as follows:
*– Lithium metal batteries packed with equipment: "P.I. 969-II"**

Lithium Metal

May not be used after 31 December 2018

or

**Place for telephone number for additional information.

Lithium metal batteries contained in equipment:

For lithium metal batteries contained in equipment, the mark need not be used provided (a) the package contains no more than 4 cells or 2 batteries, and (b) the consignment contains no more than two packages of lithium metal batteries contained in equipment.

Additional marking as follows:
*– Lithium metal batteries contained in equipment: "P.I. 970-II"**

*Optional when origin and destination are both within the contiguous 48 U.S. states.

Ground Shipments

For ground shipments, the markings shown above are common in most countries around the world (see ADR SP 188, TDGR SP 34, or check local regulations). The U.S. additionally requires ground shipments of **small lithium metal batteries** to be identified as forbidden on passenger aircraft. The Cargo Aircraft Only label may be used, or either of the two following statements, in letters at least 6 mm high:

"PRIMARY LITHIUM BATTERIES—FORBIDDEN FOR TRANSPORT ABOARD PASSENGER AIRCRAFT"

– or –

"LITHIUM METAL BATTERIES—FORBIDDEN FOR TRANSPORT ABOARD PASSENGER AIRCRAFT."

– or –

The U.S. also allows unique exceptions on the ground for **medium lithium batteries**, not recognized in other, international regulations. For lithium ion, medium cells have > 20 Wh but ≤ 60 Wh; and medium batteries have > 100 Wh but ≤ 300 Wh. For lithium metal, medium cells have a lithium content > 1 gram, but ≤ 5 grams; and lithium metal batteries have a lithium content > 2 grams, but ≤ 25 grams. Medium lithium cells/batteries may be shipped by ground as lightly regulated, provided they have the appropriate lithium ion or lithium metal mark (as shown above) and display the following marking:

"LITHIUM BATTERIES—FORBIDDEN FOR TRANSPORT ABOARD AIRCRAFT AND VESSEL."

Note: Ground service cannot be used for lithium battery shipments to Alaska, Hawaii, Puerto Rico or Avalon, California (U.S.).

© 2012-2018 United Parcel Service of America, Inc. UPS, the UPS brandmark and the color brown are trademarks of United Parcel Service of America, Inc. All rights reserved. 11/18

Figure 7
Air Shipments of Lithium Ion Batteries

Is my Lithium Ion Battery air shipment fully regulated so that it requires UPS Dangerous Goods service?
(For detailed information about required documentation and labeling noted below, please see Page 7.)

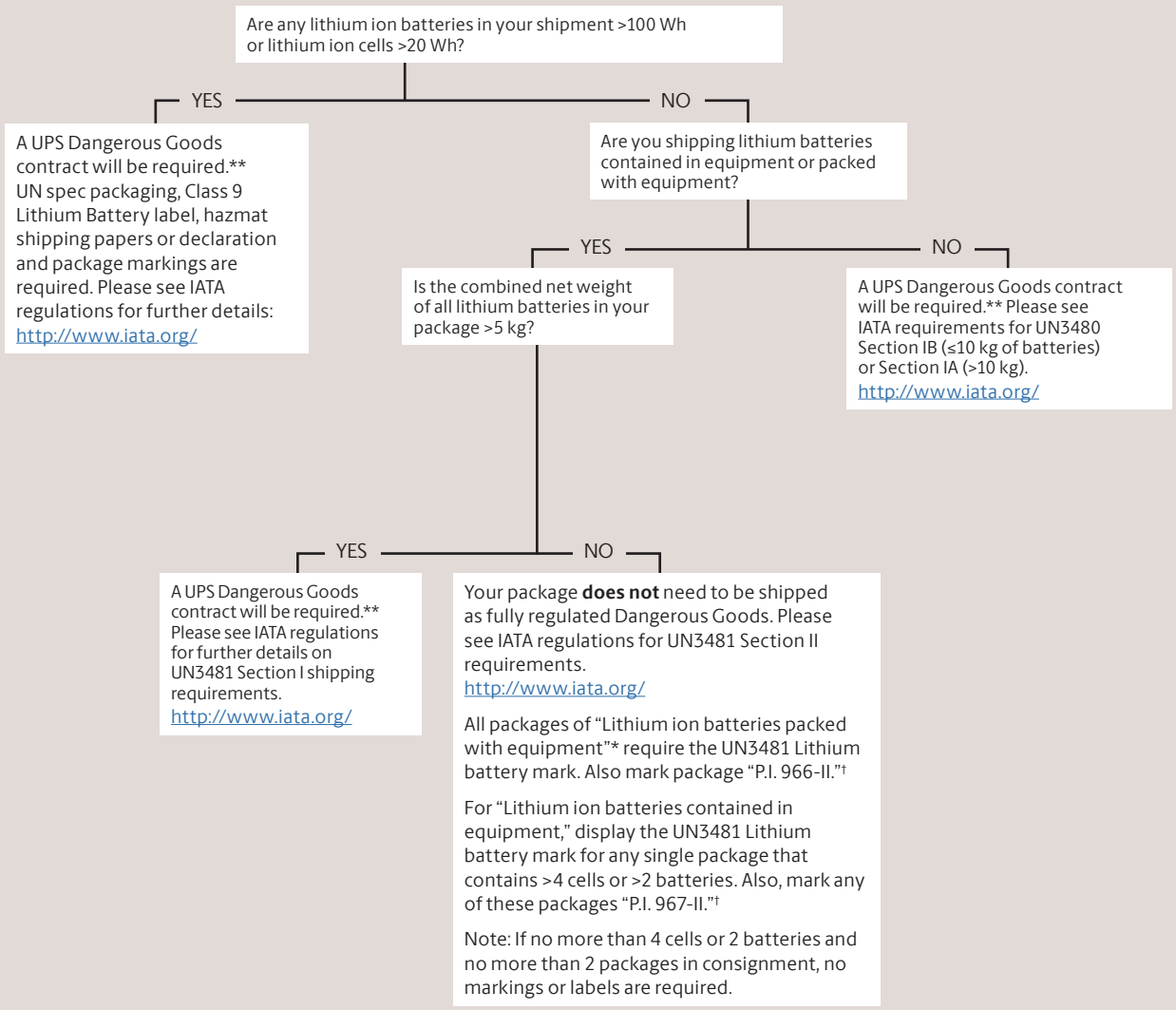

*Packaging for shipments of lithium batteries "packed with equipment" must be able to withstand a 1.2-meter drop test, and all batteries must be packed to eliminate the possibility of a short-circuit or activation. Do not use envelopes or any soft-sided packs.

**Contracts are required for UPS Small Package and UPS Air Cargo services but not UPS Air Freight hazmat shipments; please contact your customer representative for details.

†Optional when origin and destination are both within the contiguous 48 U.S. states.

© 2012-2018 United Parcel Service of America, Inc. UPS, the UPS brandmark and the color brown are trademarks of United Parcel Service of America, Inc.
All rights reserved. 11/18

Figure 8
Ground Shipments of Lithium Ion Batteries*

Is my Lithium Ion Battery ground shipment fully regulated, requiring UPS Dangerous Goods service?
(For detailed information about required marking and labeling noted below, please see page 7.)

Note: Ground shipments of lithium batteries must not be sent to any address in Alaska, Hawaii, Puerto Rico, or destinations on islands such as Avalon, CA.

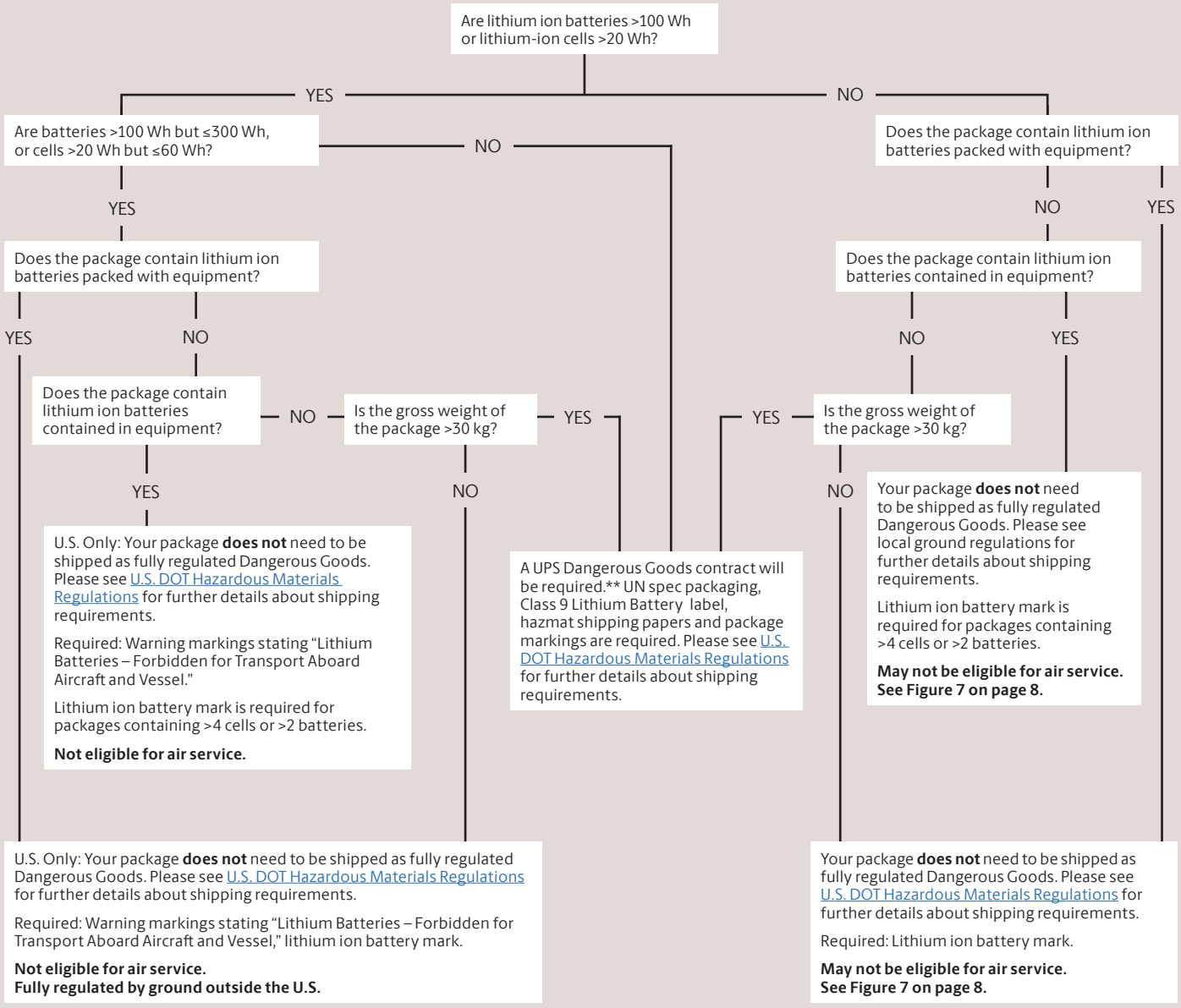

*Packaging for shipments of lithium batteries shipped alone or packed with equipment must be able to withstand a 1.2 meter drop test, and all batteries must be packed to eliminate the possibility of a short-circuit or activation. Do not use envelopes or any other soft-sided packs. Please see page 5 for more information.

**Contracts are required for UPS Small Package and UPS Air Cargo® services but not UPS Air Freight hazmat shipments; please contact your customer representative for details.

© 2012-2018 United Parcel Service of America, Inc. UPS, the UPS brandmark and the color brown are trademarks of United Parcel Service of America, Inc.
All rights reserved. 11/18

Figure 9
Air Shipments of Lithium Metal Batteries

Is my Lithium Metal Battery air shipment fully regulated so that it requires UPS Dangerous Goods service?
(For detailed information about required documentation and labeling noted below, please see Page 7.)

Note: Pre-approval is required to ship lithium metal batteries packed without equipment via UPS Air services. Visit ups.com for additional information.

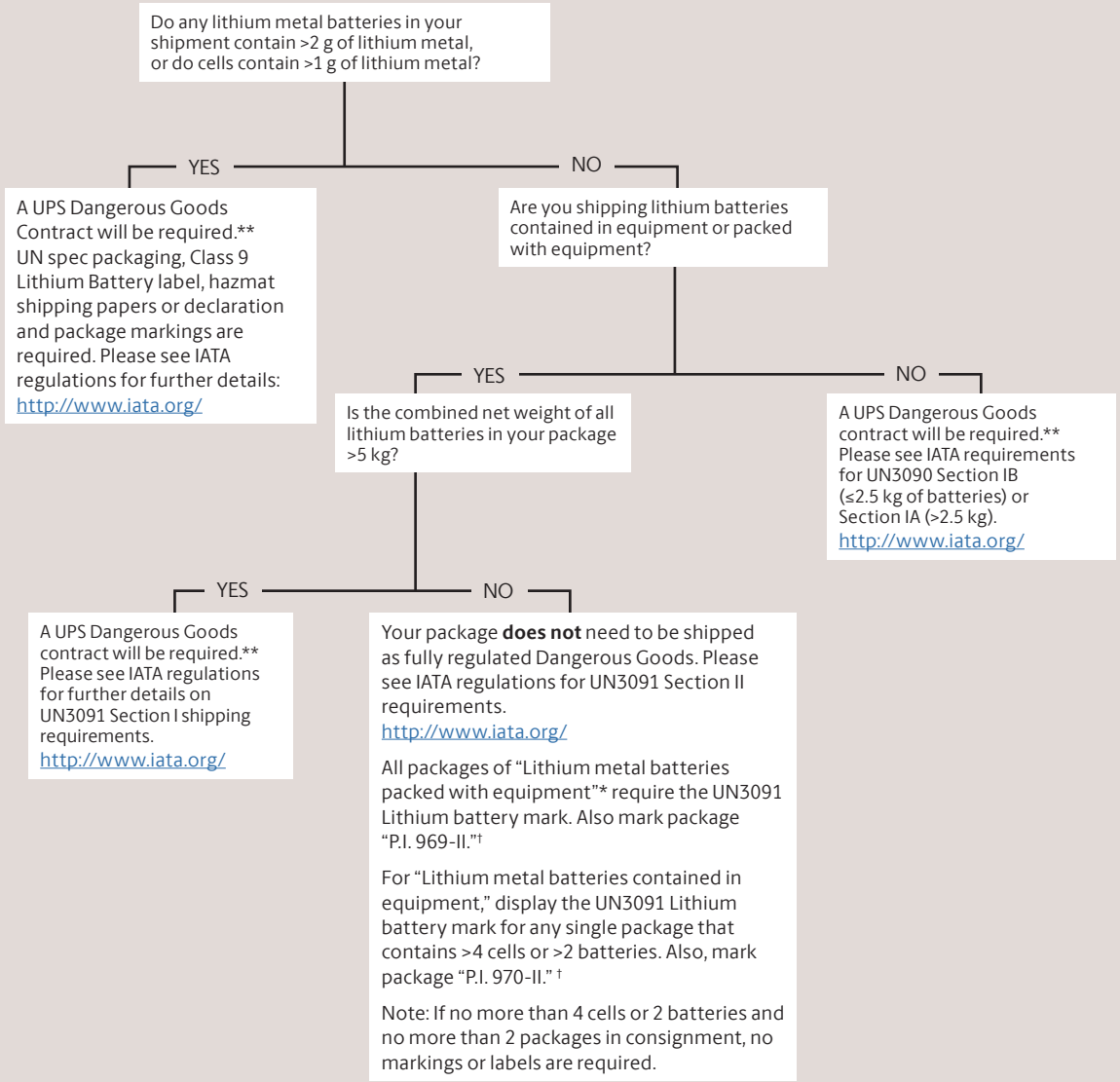

*Packaging for shipments of lithium batteries "packed with equipment" must be able to withstand a 1.2-meter drop test, and all batteries must be packed to eliminate the possibility of a short-circuit or activation. Do not use envelopes or any soft-sided packs.

**Contracts are required for UPS Small Package and UPS Air Cargo services but not UPS Air Freight hazmat shipments; please contact your customer representative for details.

†Optional when origin and destination are both within the contiguous 48 U.S. states.

© 2012-2018 United Parcel Service of America, Inc. UPS, the UPS brandmark and the color brown are trademarks of United Parcel Service of America, Inc.
All rights reserved. 11/18

Figure 10
Ground Shipments of Lithium Metal Batteries*

Is my Lithium Metal Battery ground shipment fully regulated so that it requires UPS Dangerous Goods service?
(For detailed information about required marking and labeling noted below, please see page 7.)

Note: Ground shipments of lithium batteries must not be sent to any address in Alaska, Hawaii, Puerto Rico, or destinations on islands such as Avalon, CA.

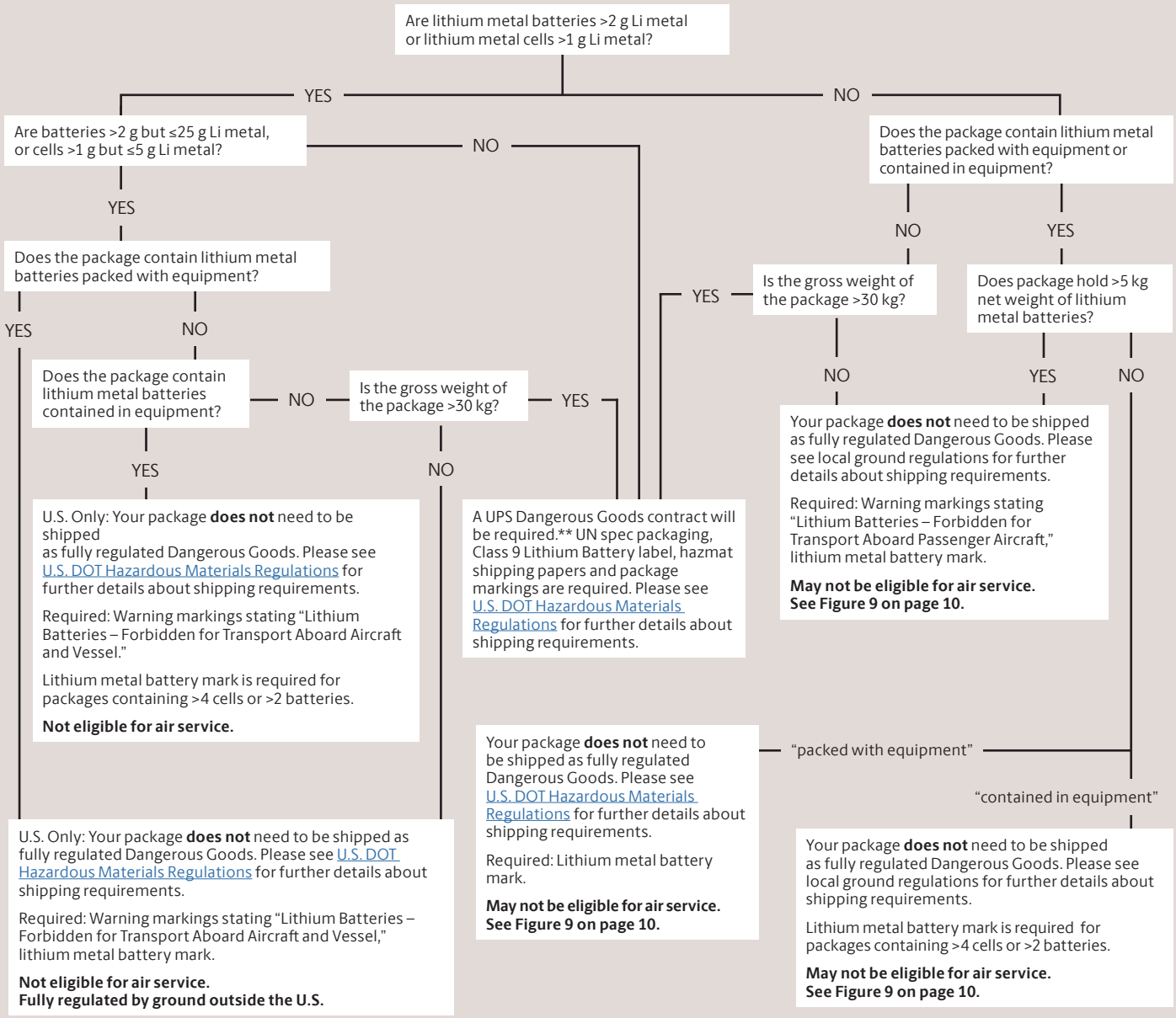

*Packaging for shipments of lithium batteries shipped alone or packed with equipment must be able to withstand a 1.2 meter drop test, and all batteries must be packed to eliminate the possibility of a short-circuit or activation. Do not use envelopes or any other soft-sided packs. Please see page 5 for more information.

**Contracts are required for UPS Small Package and UPS Air Cargo® services but not UPS Air Freight hazmat shipments; please contact your customer representative for details.

© 2012-2018 United Parcel Service of America, Inc. UPS, the UPS brandmark and the color brown are trademarks of United Parcel Service of America, Inc.
All rights reserved. 01972381 11/18